Overcoming hurdles: Challenges in testing and validating wind turbine transformers with electronic tap changers

ABSTRACT

Grid codes are technical requirements and standards that govern electrical grids, ensuring reliability and safety. These codes have evolved to accommodate changes in technology, policy, and environmental concerns. With increasing penetration of renewable energy sources such as wind power, grid codes have become more demanding. Compliance with grid codes is crucial for wind turbine manufacturers; power plants must withstand voltage transients and operate within specified limits. Grid stability is an additional challenge where available connection points do not meet requirements. To address these challenges, Siemens Gamesa is conducting a technology development project called FASTAP, meaning "fast tap" change, funded by the European Union's Horizon 2020 program under grant agreement No 971145. This project focuses on developing Dry-Type Transformers (DTT) and Oil-Immersed Transformers (OIT) with Electronic Tap Changers (ETC) to enhance Wind Turbine Generator (WTG) capabilities and support grid compliance. Potential benefits are cost savings and improved performance, especially for weak grids.

KEYWORDS:

Wind turbine transformers, electronic tap changers, thyristors, grid code compliance, weak grid

Ugur YAYAN, Osman YILMAZ

Grid codes serve as an integral element in ensuring the dependability, security, and steadiness of power systems

Introduction

The term "grid code" pertains to technical prerequisites and standards that delineate the structure, functioning, and performance of electrical grids. Grid codes serve as an integral element in ensuring the dependability, security, and steadiness of power systems. Over time, grid codes have undergone modifications to accommodate advancements in technology, policies, and environmental considerations [1].

During the early stages of electricity generation, there were no established norms or regulations governing the operation of power systems. However, as the industry expanded and interconnected grids were developed, the establishment of a unified set of rules and technical specifications became increasingly imperative. Grid codes typically encompass a range of technical prerequisites, including voltage and frequency regulation, protective measures, operational limitations, and communication protocols. These requirements are designed to guarantee the safe and efficient connection of electrical equipment such as generators, inverters, and transformers to the grid without system disturbance or damage. Moreover, grid codes play a pivotal role in facilitating the integration of renewable energy sources like wind and solar power into the grid. They often incorporate specific provisions for the connection of such sources, including requirements for reactive power control and voltage ride-through capability.

LVRT refers to the ability of power plants to withstand sudden transients without tripping or halting power production for voltages below the rated voltage

As renewable energy sources increasingly interconnect with the grid, the responsibility for safe system operation is increasingly placed on new power plants. Consequently, requirements are becoming more demanding. Examples of this are Low Voltage Ride Through (LVRT) and High Voltage Ride Through (HVRT) requirements. LVRT refers to the ability of power plants to withstand sudden transients without tripping or halting power production for voltages below the rated voltage, while HVRT pertains to transient voltages above the rated voltage. The evolution of these requirements can be traced back to 2006 when EON published the initial LVRT envelope curve. Since then, the challenges posed by LVRT curves have become progressively more demanding. The first complete set of HVRT curves emerged in later years. An LVRT envelope curve is given in the example below:

A second significant electrical challenge for WTG manufacturers is grid weakness. Grid advancements have not kept pace with the rapid changes demanded by the new electrical paradigm. This imposes limitations on the placement of WTGs within the grid infrastructure. Grid fragility, or short-circuit ratios at wind farm (WF) connection points, imposes substantial constraints on developers. Consequently, grid connection points are lacking in areas with available space (typically outside urban areas) and renewable energy sources suitable for constructing wind farms (WF) or photovoltaic (PV) plants.

As the key electrical component of a WF, WTGs must continuously update and enhance electrical capabilities to ensure compliance with WF grid codes for our customers due to increasingly stringent requirements for WF globally.

Compliance with grid codes is evaluated at the Point of Common Coupling (PCC), where a WF connects to the grid via a substation step-up transformer. A classical wind farm scheme is shown in Figure 2 for clarity.

Substation transformers are typically equipped with conventional electromechanical on-load tap changers (OLTCs). They respond slowly to grid events that impact voltage. However, if a wind turbine transformer is equipped with an ETC, it can respond swiftly to stabilize the low voltage (LV) side, even if an OLTC in a substation transformer operates at a slower pace. Rapid operation is achieved by means of a tap changer using power electronic components such as thyristors, as opposed to a conventional OLTC.

The ability to rapidly adjust tap settings is immensely advantageous for complying with grid codes because it enables swift regulation of voltage on the wind turbine side. Rapid regulation within one period (20ms in a 50Hz grid; 16.6ms in a 60Hz grid) ensures a stable voltage amplitude on the wind turbine side. It relies on specific tap configurations during grid disturbances. Consequently, the low voltage profile (0.69kV for WTG in this project) remains unaffected during such events. The medium voltage side (20kV) differs as the tap changer promptly detects voltage changes and adjusts tap settings within a brief interval of one-half of a period. This operation ensures proper functionality, enabling WTGs' LV amplitude to remain within its steady-state voltage range while continuing to provide the required reactive power to the grid. Since LV side voltages are not affected by MV side voltage amplitudes thanks to fast tap changes, generator insulation is unaffected.

At Siemens Gamesa, we are currently engaged in the FASTAP project, granted by the European Union Commission's Horizon FTI program. This project focuses on the development of both dry-type and oil-immersed transformers equipped with ETCs. The tap windings are situated on the 20kV MV winding side. When a grid event causes voltage fluctuations on the MV side, taps are activated to ensure a stable voltage profile on the LV side. Consequently, WTG operation can continue

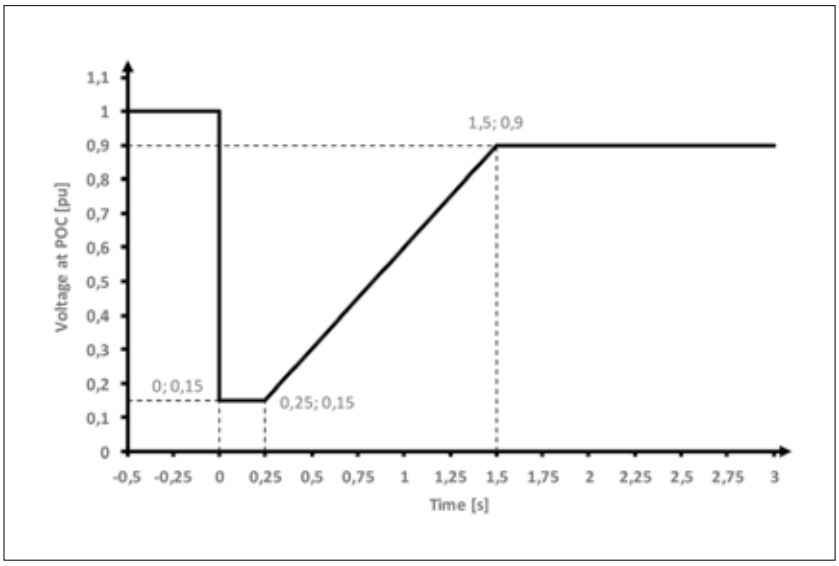

Figure 1. Denmark Grid Code LVRT Graph [1]

If a wind turbine transformer is equipped with an ETC, it can respond swiftly to stabilize the low voltage (LV) side, even if an OLTC in a substation transformer operates at a slower pace

uninterrupted, providing the required reactive power to the grid.

This project offers significant potential cost savings by minimizing reliance on reactive power compensation units (RPCUs) within wind farms. RPCUs such as capacitor banks or STATCOM are installed in wind farms to adhere to grid code regulations regarding reactive power. However, the installation of RPCUs increases energy costs for wind farms. By integrating an ETC transformer, wind turbine generators (WTGs) are able to help support voltage by supplying reactive power to the grid during voltage drops. The voltage on the LV side is relatively unaffected compared to that on the MV side, as the WTG converter continues to provide reactive power. Consequently, the necessity for RPCU units can be reduced and, in specific cases, eliminated. In addition, this solution offers advantages in weak grid conditions.

At Siemens Gamesa, we are currently engaged in the FASTAP project, granted by the European Union Commission's Horizon FTI program which focuses on transformers equipped with ETCs

Electronic Tap Changers

Electronic Tap Changers with light-triggered thyristors (LTTs) have emerged as promising and increasingly popular components for power transformer applications. This relatively new technology offers several advantages over traditional mechanical tap changers, which have historically relied on electromechanical switches to adjust transformer output voltages. The mechanical nature of traditional tap changers makes them prone to wear and tear. This leads to maintenance issues and potential reliability problems. Furthermore, slow response to load changes can result in voltage fluctuations and other operational challenges.

In contrast, ETCs with LTTs provide faster and more precise voltage adjustments thanks to the remarkable speed and accuracy of LTTs . They enable transformers to promptly respond to fluctuations in load and maintain stable voltage levels. Moreover, such ETCs deliver higher reliability and require less maintenance than their mechanical counterparts. As a result, they offer reduced operating costs, minimized downtime and deliver enhanced performance and efficiency.

Nonetheless, the application of ETCs with LTTs to wind turbine transformers presents certain challenges for testing and validation. Since this technology is relatively novel and not fully covered by standardized protocols, unique testing requirements must be addressed. These challenges encompass a range of areas, including environmental, electrical, safety, and interoperability testing. A comprehensive approach must be taken to overcome challenging demands and thoroughly evaluate a device's performance under various conditions, as well as its compatibility with other equipment within the system.

We are currently engaged in the development of DTT and OIT transformers which incorporate ETCs for the FASTAP project. For clarity of the winding configuration, Figure 3 depicts an example.

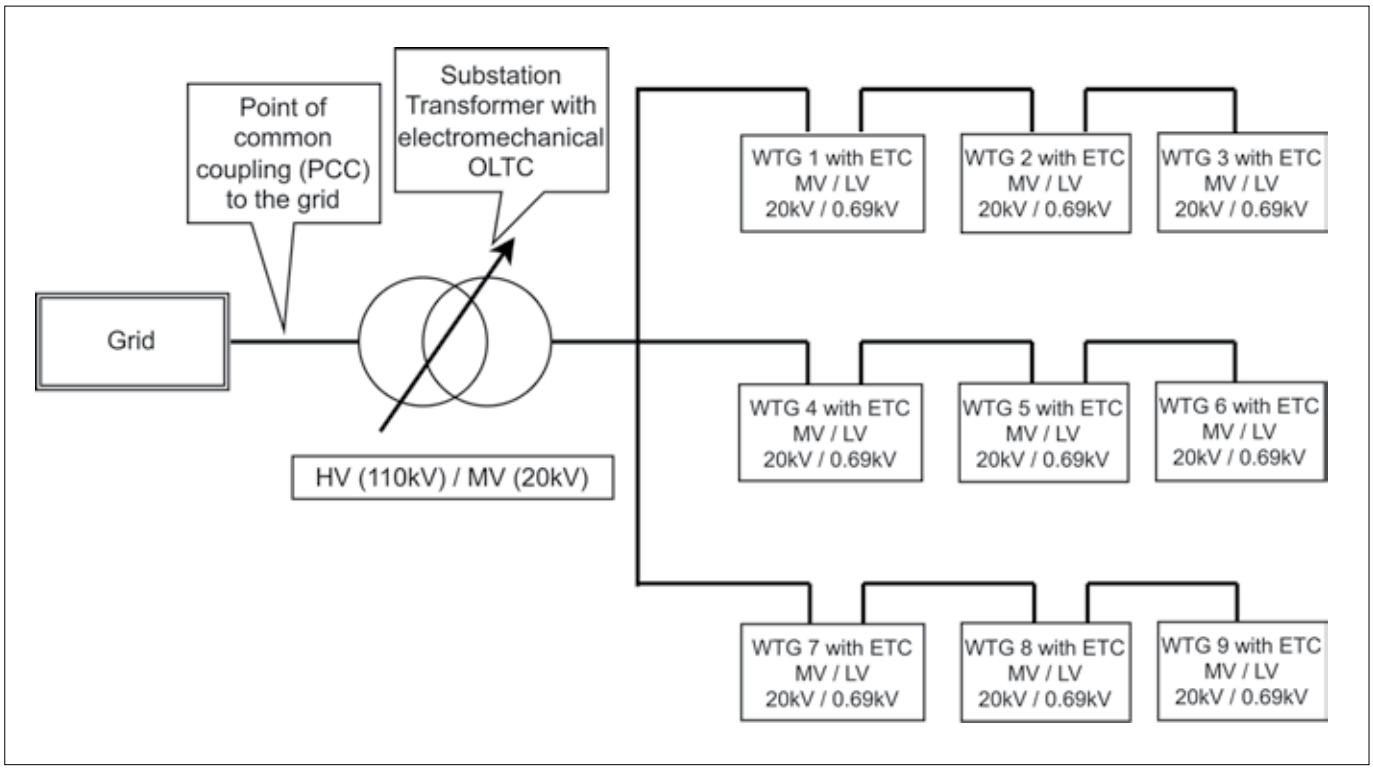

Figure 2. A Classical Wind Farm Scheme

ETCs with LTTs provide faster and more precise voltage adjustments thanks to the remarkable speed and accuracy of LTTs

The configuration of tap windings and their respective turn ratios is contingent upon potential voltage fluctuations within the grid, acceptable operational voltage ranges as stipulated by various national grid codes, and overall cost. In the illustration above, there are a total of four windings denoted by x%, indicating four taps within the transformer. Each tap winding is characterized by a turn ratio of x%. The specific value of x is determined by factors elucidated here.

Each individual winding is connected to a pair of valves, which are formed by two anti-parallel thyristors. LTT thyristor voltages and current limits depend on transformer MV voltages and rated winding currents, respectively. In the FASTAP project, LTT thyristors are rated at 7500V for protective Breakover Voltage (BOV) and 8000V for repetitive peak and reverse voltages; they are capable of conducting up to 540A continuously. When the terminal voltage exceeds 7500V, the thyristor protects itself and switches from insulating to conducting. The states of these anti-parallel LTT thyristors, conducting or insulating, are switched by gate pulses. By manipulating thyristor states, tap windings are enabled or disabled to modify transformer turn ratios. This adjustment plays a crucial role in stabilizing the voltage amplitudes on the LV side.

This article elucidates challenges encountered during prototype validation for oil-immersed wind turbine transformers equipped with ETCs. Delving into these challenges sheds light on the intricacies of testing and validating this innovative technology and offers insights into necessary measures to ensure optimal performance and reliability.

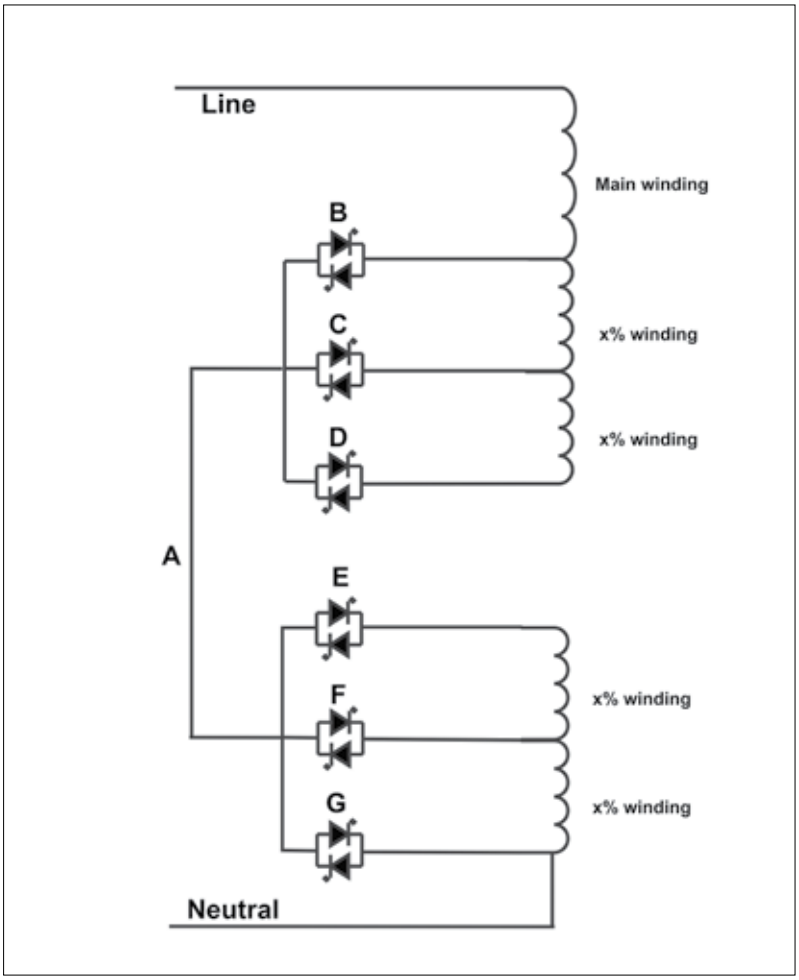

Figure 3. Transformer Winding Layout, MV Side

Testing and Validation

Routine Tests

- Winding resistance measurements play a crucial role in the installation and final assembly of transformers. These measurements are conducted in accordance with the guidelines outlined in Section 11.2 of IEC 60076-1, which specify direct current measurements. However, when it comes to transformers equipped with LTTs, a specific voltage is required to trigger LTTs. As a result, winding resistance measurements cannot be performed during Factory Acceptance Tests (FATs). However, the resistance can only be measured during the active part installation stage of ETCs.

- A known voltage is typically applied to the primary winding of the transformer during a voltage ratio test, and the secondary winding voltage is measured. According to IEC 60076-1, Section 11.3, "The voltage ratio shall be measured on each tapping." This test is usually performed in manufacturing. Voltage ratio tests can be performed during FAT tests. However, it is important to use a voltage supply which adequately triggers LTTs. Therefore, voltage ratios were measured in all positions by a 3-phase

In the FASTAP project, LTT thyristors are rated at 7500V for protective Breakover Voltage (BOV) and 8000V for repetitive peak and reverse voltages; they are capable of conducting up to 540A continuously

measurement bridge during FAT tests with 250V supplied from the HV side. It has been observed that there is a slight difference in voltage ratio measurements with LTTs because of thyristor voltage drops.
The voltage drop across LTTs necessitates careful consideration in the electrical design of transformers equipped with ETCs. This is crucial in order to prevent the voltages during the turn ratio test from exceeding tolerances set by the IEC 60076 series. By taking into account potential voltage drops in LTTs, designers can ensure that transformer performance remains within IEC standards' limits.

- ETCs incorporating LTTs have gained usage in power transformers owing to their exceptional reliability and efficiency. However, it is worth acknowledging that tap changers may increase loss within a transformer due to the power dissipation of LTTs.
LTTs are solid-state devices that switch transformer windings to different tap positions. During conduction, LTTs generate heat due to forward voltage drops across thyristors. This heat dissipation creates losses that are greater than losses in traditional mechanical tap changers.
Although LTT losses are typically modest compared to transformer losses, they can still be significant under certain circumstances. The impact of these losses can be mitigated by selecting LTTs with low forward voltage drops and high thermal conductivity. Additionally, optimizing the tap changer design can minimize power dissipation.
A manual tap changer was utilized during design to evaluate the impact of additional losses arising from LTTs. The manual tap changer was designed to short tap windings and establish a nominal position. Additional losses from LTTs were approximately 1% of the original load loss. Consequently, it is crucial to account for these losses during the design phase to ensure compliance with Eco-design efficiency criteria.
In summary, ETCs utilizing LTTs increase load loss in power transformers. By factoring in additional losses from LTTs, designers can optimize transformer performance and meet efficiency guidelines.

Figure 4. Oil-immersed wind turbine transformer with an electronic tapchanger (ETC)

The voltage drop across LTTs necessitates careful consideration in the electrical design of transformers equipped with ETCs

- Lightning Impulse (LI) tests were performed by sending impulses to thyristors. When the voltage appearing between taps exceeds 7500V (thyristor BOV), it protects itself by switching to conduction. However, thyristors subject to LI waveforms switch before other thyristors. Therefore, there are no short-circuit conditions during LI tests.

Tap Changer Tests

There are three different standards which cover tap changer tests for power transformers.

- IEC 60076-1 [2] is the general standard for power transformers and includes requirements for design, manufacturing, and testing. It also includes some basic testing requirements for OLTCs.
- IEC 60076-24 [3], on the other hand, specifically focuses on voltage-regulating distribution transformers equipped with on-load voltage regulation. It also includes tests for power transformer OLTCs. This standard provides detailed procedures for testing OLTCs, including mechanical and electrical tests, as well as tests for reliability and durability.
- IEC 60214-1 [4] specifies performance requirements for tap changers, including on-load and off-circuit tap changers, and provides test methods to verify

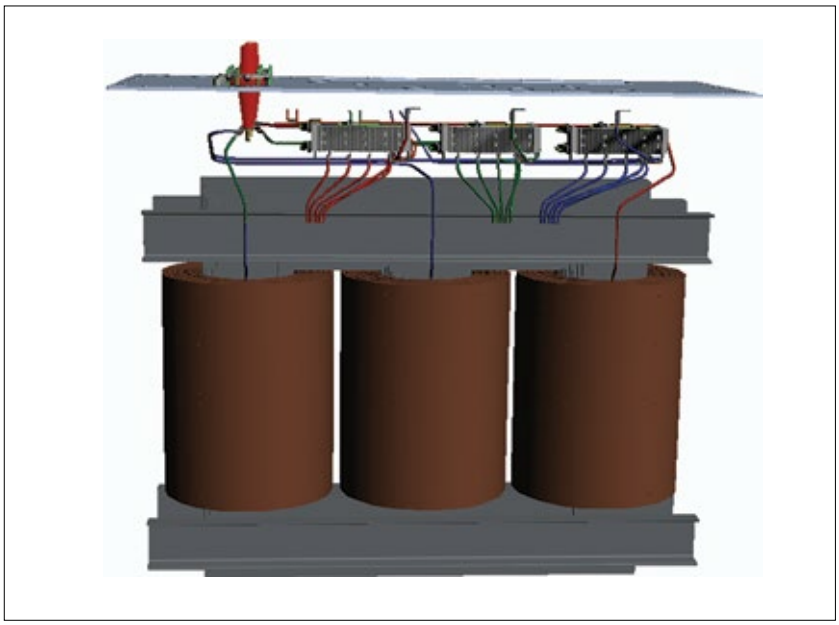

Figure 5. Active part of oil-immersed wind turbine transformer with ETC

ETC technology does not have a physical tap selector, and the tap selection is implemented by the converter control unit software

performance. The standard covers various aspects of tap changer performance, such as electrical and mechanical endurance, accuracy of voltage regulation, and control circuit stability. However, as shown by Scope and Applicability listed in Table 1, there is no particular standard that fully applies to this technology. To help fill this void, the prototype tests below may be considered for future revision of relevant standards.

- To assess endurance of ETCs and tap winding connections according to IEC 60214, a total of 50,000 tap changes were switched. For 4 tap changes per day, this would be equivalent to at least a 34-year lifetime. On the other hand, DC insulation tests were not possible on the HV side.
- This technology does not have a physical tap selector. Tap selection is implemented by the converter control unit software. Consequently, traditional measuring points are not available for insulation tests. However, while thyristors and transformers could be tested separately, comprehensive insulation tests were performed on a combined system of thyristors and transformers, including LI tests.
- Although 60076-24 does not apply to this power range, 10 cycles of tap-change operations across the complete range were performed with one winding short-circuited to check the withstand capability of ETC under unbalanced conditions. Functional tests, while de-energized or under no-load conditions, could not be performed since thyristors require a certain voltage level to trigger. Neither were OLTCs tested in operation according to IEC 60076-1 for the same reason.

Table 1. Technology Applicability of Relevant Standards

Standard	Scope	Technology Applicability
IEC 60076-24, Specification of Voltage Regulating Distribution Transformers (VRDT) [3]	This standard applies to medium power transformers from 25kVA up to 3150kVA with the highest voltage for equipment up to 36kV, or in low voltage (LV) networks with the highest voltage for equipment of up to 1.1kV equipped with voltage regulating devices.	The power levels achieved in modern wind turbines have surpassed 3150kVA, reaching nearly 15MW in offshore turbines. Consequently, the power level indicated in the standard cannot be applied to transformers rated above 3150kVA.
IEC 60076-1, Power Transformers Part 1: General [2]	This part of IEC 60076 applies to three-phase and single-phase power transformers.	It is applicable mainly for mechanical tap changers. (Section 11.7 Tests OLTCs operation test.)
IEC 60214-1, Tap Changers Part 1: Performance requirements and test methods [4]	Applies mainly to tap-changers with arcing contacts but may also be used for arc-free OLTCs (e.g., solid-state) insofar as conditions are applicable.	While the main focus of the scope is on traditional OLTC systems, it is important to acknowledge that electronic, spark-free OLTC devices are also mentioned. Therefore, it is partially applicable.

This article underscores the significance of considering and enhancing existing standards to effectively incorporate and regulate advancements in ETC technology for wind turbine transformers

Conclusions

New wind farm installations face challenges. On the one hand, grid codes are more and more demanding; on the other, grids are weaker than usual at the point of common coupling. ETCs with LTTs are an important new development in technology for changing tap positions in wind turbine transformers. They offer advantages over traditional mechanical tap changers, such as faster response time and increased reactive power. Considering STATCOM costs, wind farms with wind turbine-level electronic tap changers provide remarkable cost savings, especially in weak grids with low X/R ratios.

This paper provides a comprehensive overview of the applicability of current international standards to transformers equipped with ETCs in oil-immersed wind turbine prototype transformers. Additionally, it highlights potential improvements to the standards to accommodate cutting-edge ETC technology. By summarizing these findings, **this article underscores the significance of considering and enhancing existing standards to effectively incorporate and regulate advancements in ETC technology for wind turbine transformers.**

References

[1] Dansk Energi, "Guide for Connection of Power-Generating Plants to the Medium and High-Voltage Grid (>1 kV) Type B, C and D," Version 1.0, Apr. 2019.

[2] "IEC 60076-1, Power Transformers - Part 1: General," 2011.

[3] "IEC 60076-24, Power Transformers - Part 24: Specification of Voltage-Regulating Distribution Transformers (VRDT)," 2020.

[4] "IEC 60214-1, Tap Changers - Part 1: Performance Requirements and Test Methods," 2014.

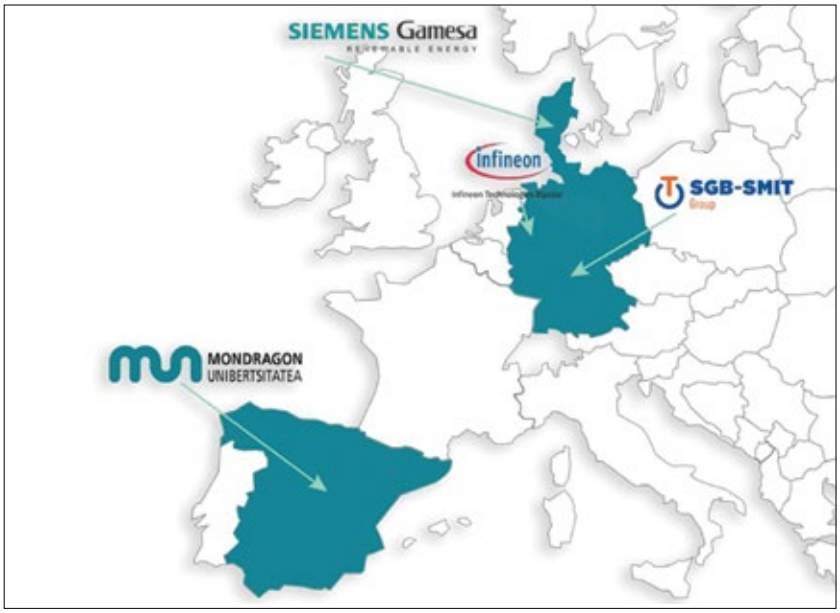

Figure 6. Stakeholders of FASTAP Horizon Project

Authors

Uğur Yayan received his B.Sc. degree in electrical engineering from Yıldız Technical University in 2015. He gained valuable experience as a power and special transformer electrical design engineer at BEST transformer before joining Siemens Gamesa Renewable Energy (SGRE) in 2019. At SGRE, he has contributed to several technology development projects and currently holds the position of Electrical Team Leader. His research focuses on areas such as wind turbine transformers, transformer efficiency, electronic tap changers, and high-temperature insulation materials. Additionally, he is an active member of the TC 14/MT 60076-16 working group.

Osman Yılmaz successfully obtained his M.Sc. degree in electrical engineering from Istanbul Technical University in 2021, focusing on grid connection of wind turbines to power distribution grids. He joined Siemens Gamesa Renewable Energy in 2019. At Siemens Gamesa, he has been actively involved in the FASTAP project since 2019. Within the project, his primary responsibility entails the development of novel transformer models and performing simulations to assess the impact of newly developed transformers on wind turbines and wind farms to check grid code compliance in the software environment. He also contributes to the FAT (Factory Acceptance Test) and validation of transformers in the project. His professional interests lie in the field of grid code compliance studies, sizing of medium and high voltage equipment, grounding grid design, as well as RMS (Root Mean Square) and EMT (Electromagnetic Transient) modelling and simulation with various power system analysis software.

PEER REVIEWED